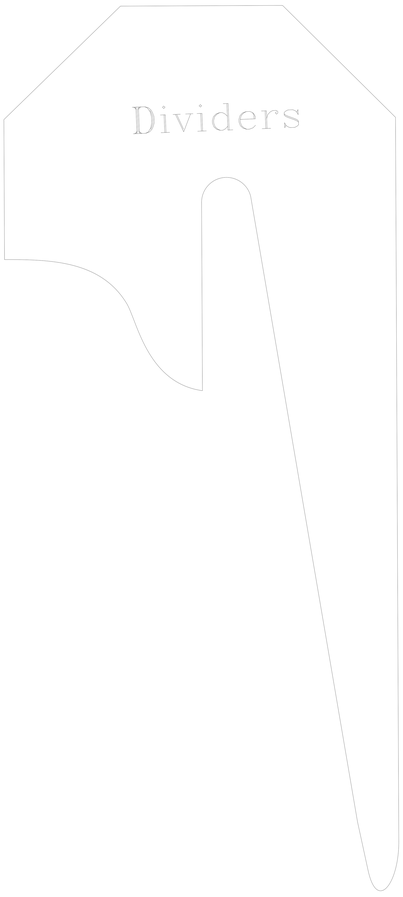
Dividers

Spacer rings

Sub baffle

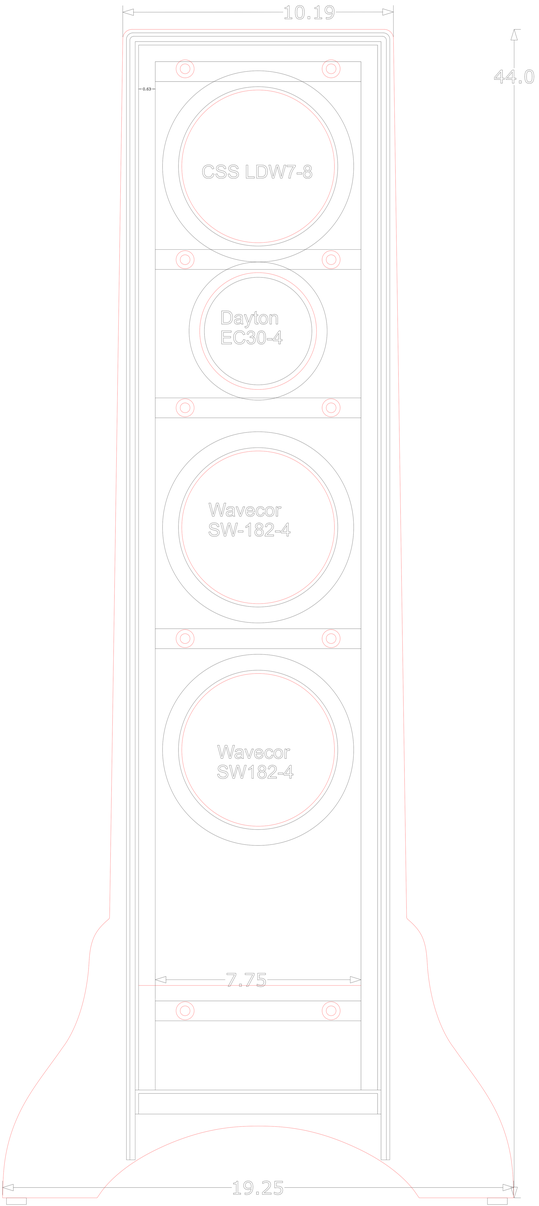
10.19
44.0
CSS LDW7-8
Dayton
EC30-4
Wavecor
SW-182-4
Wavecor
SW182-4
7.75
19.25

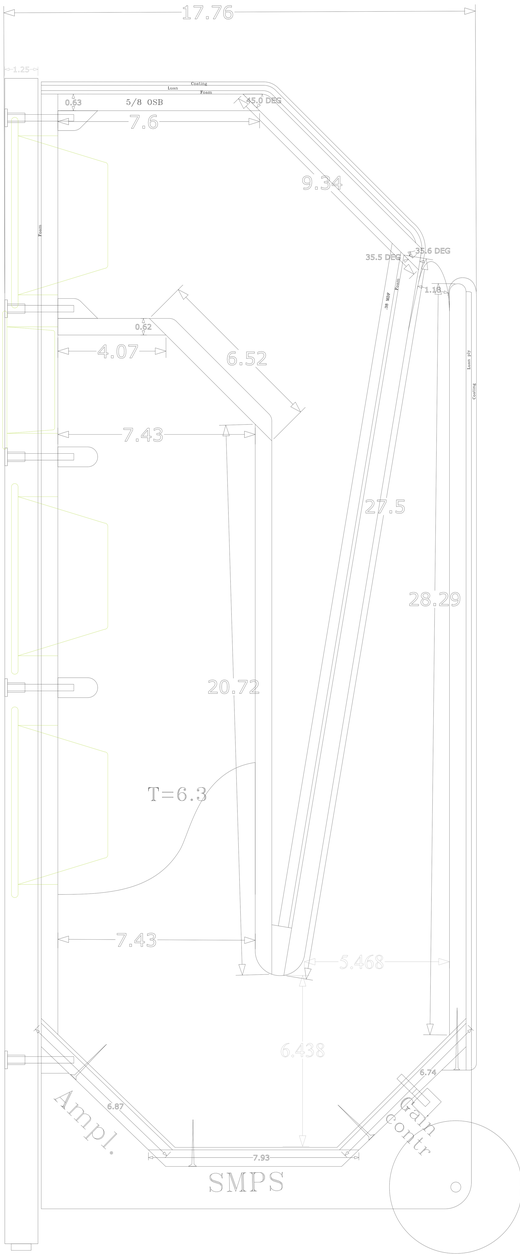
17.76
1.25
Coating
Lens
Frame
0.63
5/8 OSB
45.0 DEG
7.6
9.34
35.5 DEG
35.6 DEG
1.18
0.62
4.07
6.52
7.43
27.5
28.29
20.72
T=6.3
7.43
5.468
6.438
6.74
6.87
7.93
Ampl.
Gain
contr
SMPS